Compressor
Voltage Code : TZ

TFH4518Y

High Temp. Commercial (HP)

400V 3~ 50Hz / 440V 3~ 60 Hz

R134a

AHC4518YTZ

Conditions	Frequency	Nominal Cooling Capacity		Sound Power
		Watts	BTU/h	ISO3745 / ISO 3743-1
EN12900_HP / R134a	50 Hz / 60 Hz	4106 / 4605	14003 / 15702	67 dBA

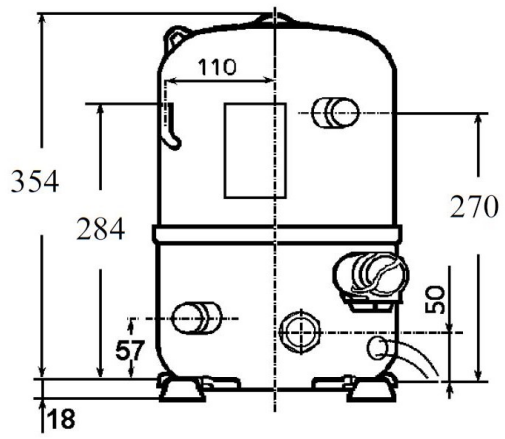

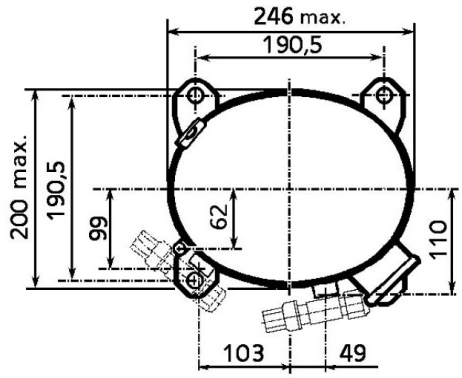

Displacement (cc)	53,2
Net Weight (Kg)	30.0
Oil Quantity (cc)	1330.0
Oil Type	Polyolester
Expansion Device	Capillary_Tube/Expansion_Valve
Cooling	Fan
Main Winding (Ohm)	6.3
Current	
RLA (A)	3.4 | 3.5
MCC (A)	4.2 | 4.6
LRA (A)	24 | 25
Electrical Equipment	TRI
Overload	Interne
Refrigerating connection for OD	
Suction Tube	15.9 (5/8")
Discharge Tube	12.7 (1/2")
Process Tube	6.35 (1/4")

* EN12900_HP : T°Cond. 50.0°C / T°Evap. 5.0°C / T°Return gas temp.. 20.0°C T°Subcooling. 0.0K

Certificates :

Note : Tecumseh reserves the right to change information contained in this document without notification.

TFH4518Y	Tension TZ : 400V 3~ 50Hz / 440V 3~ 60 Hz

Les performances sont données dans les **conditions EN12900_HP :**
Condition Dew

Gaz aspirés : 20.0 °C
Sous refroidissement : 0.0 K

The performance data are in **EN12900_HP conditions :**
Dew Condition

Return gas : 20.0 °C
Subcooling : 0.0 K

50 Hz R134a

N°216GU-T

4 | T condensation	5 | T évaporation	(°C)	-25	-20	-15	-10	-5	0	5	10	15
30	1 | P frigorifique	(Watt)	930	1392	1953	2629	3436	4390	5507	6803	8293
	2 | P absorbée	(W)	729	852	974	1093	1204	1305	1391	1459	1506
	3 | I absorbée	(A)	2.64	2.72	2.80	2.89	2.99	3.09	3.19	3.30	3.42
40	1 | P frigorifique	(Watt)	658	1088	1604	2222	2957	3826	4844	6027	7391
	2 | P absorbée	(W)	712	851	995	1143	1289	1430	1564	1685	1791
	3 | I absorbée	(A)	2.55	2.67	2.80	2.94	3.07	3.22	3.36	3.52	3.68
50	1 | P frigorifique	(Watt)		772	1231	1778	2429	3200	4106	5165	6390
	2 | P absorbée	(W)		824	986	1156	1332	1508	1683	1852	2012
	3 | I absorbée	(A)		2.59	2.76	2.94	3.12	3.31	3.50	3.70	3.90
60	1 | P frigorifique	(Watt)			864	1327	1882	2542	3325	4246	5321
	2 | P absorbée	(W)			951	1139	1338	1544	1755	1966	2174
	3 | I absorbée	(A)			2.69	2.91	3.13	3.36	3.60	3.84	4.08

60 Hz R134a

N°216GU-T

4 | T condensation	5 | T évaporation	(°C)	-25	-20	-15	-10	-5	0	5	10	15
30	1 | P frigorifique	(Watt)	1138	1637	2258	3024	3956	5079	6413	7981	9807
	2 | P absorbée	(W)	849	1007	1171	1332	1483	1616	1725	1801	1837
	3 | I absorbée	(A)	2.25	2.37	2.50	2.65	2.81	2.99	3.18	3.39	3.62
40	1 | P frigorifique	(Watt)	801	1247	1798	2476	3304	4304	5499	6911	8563
	2 | P absorbée	(W)	802	977	1167	1365	1565	1757	1935	2091	2217
	3 | I absorbée	(A)	2.15	2.31	2.49	2.68	2.89	3.12	3.36	3.61	3.88
50	1 | P frigorifique	(Watt)		876	1356	1947	2670	3548	4605	5861	7339
	2 | P absorbée	(W)		915	1122	1347	1583	1823	2060	2285	2491
	3 | I absorbée	(A)		2.20	2.42	2.66	2.92	3.19	3.48	3.78	4.10
60	1 | P frigorifique	(Watt)			945	1448	2067	2824	3742	4842	6147
	2 | P absorbée	(W)			1047	1288	1551	1828	2112	2396	2671
	3 | I absorbée	(A)			2.31	2.59	2.89	3.21	3.54	3.89	4.25

1 = cooling capacity 2 = power input 3 = current 4 = condensing temperature 5 = evaporating temperature

Nota : Tecumseh se réserve le droit de modifier les informations contenues dans ce document sans préavis.

Note : Tecumseh reserves the right to change information contained in this document without notification.

© 2021 Tecumseh Products Company
All rights reserved